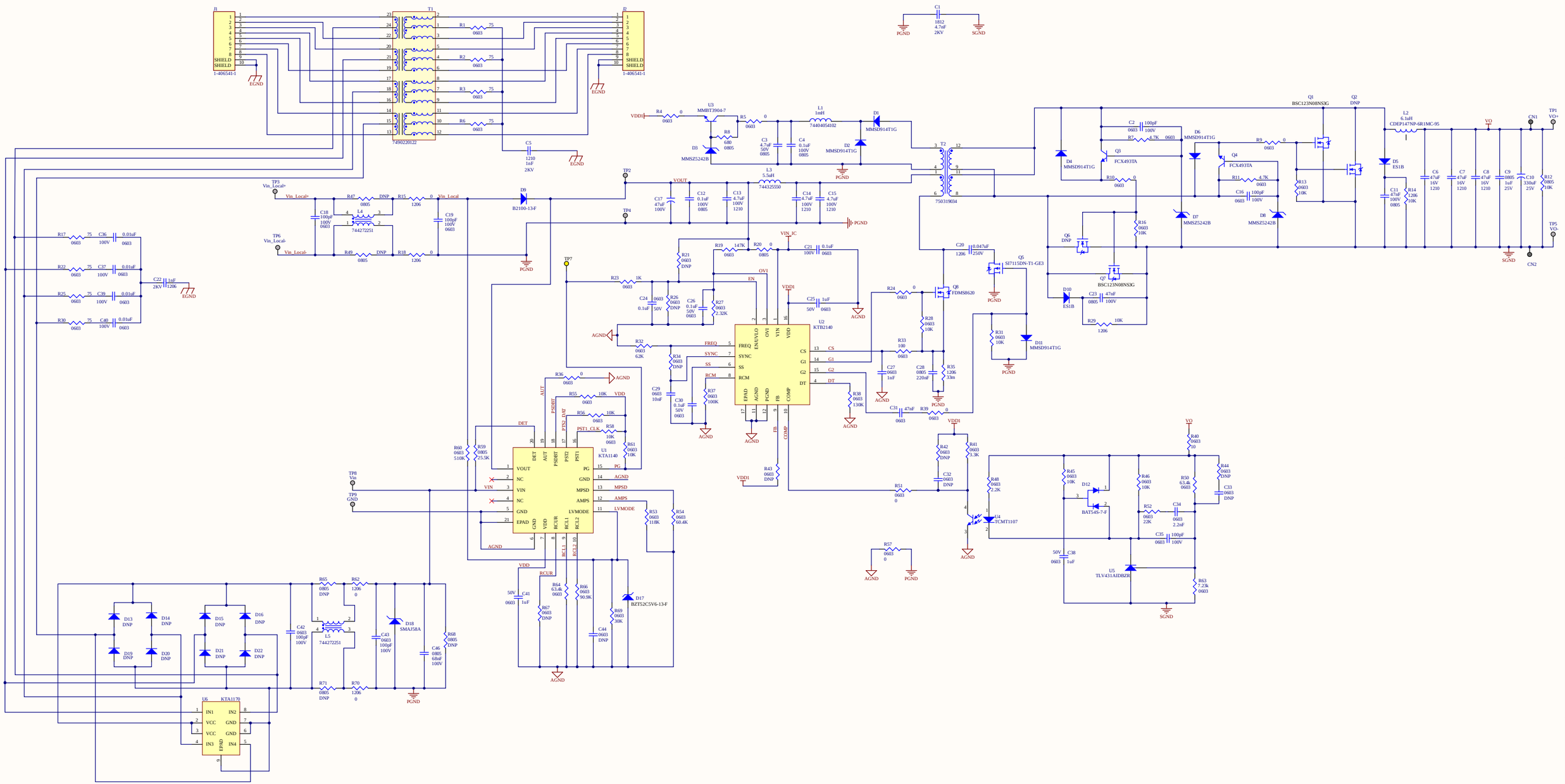

Title KTA1140EUAQ-WB-MCEV01.PrjPcb			Kinetic Technologies 6399 San Ignacio Ave Suite 250 San Jose, CA 95119 (408) 746 0000
Size: Ledger	DrawnBy EsEm	Revision: 1	
Date: 3/7/2025	Time: 1:41:54 PM	Sheet 1 of 1	
File: KTA1140EUAQ-WB-MCEV01.SchDoc			

SCH-0033-01

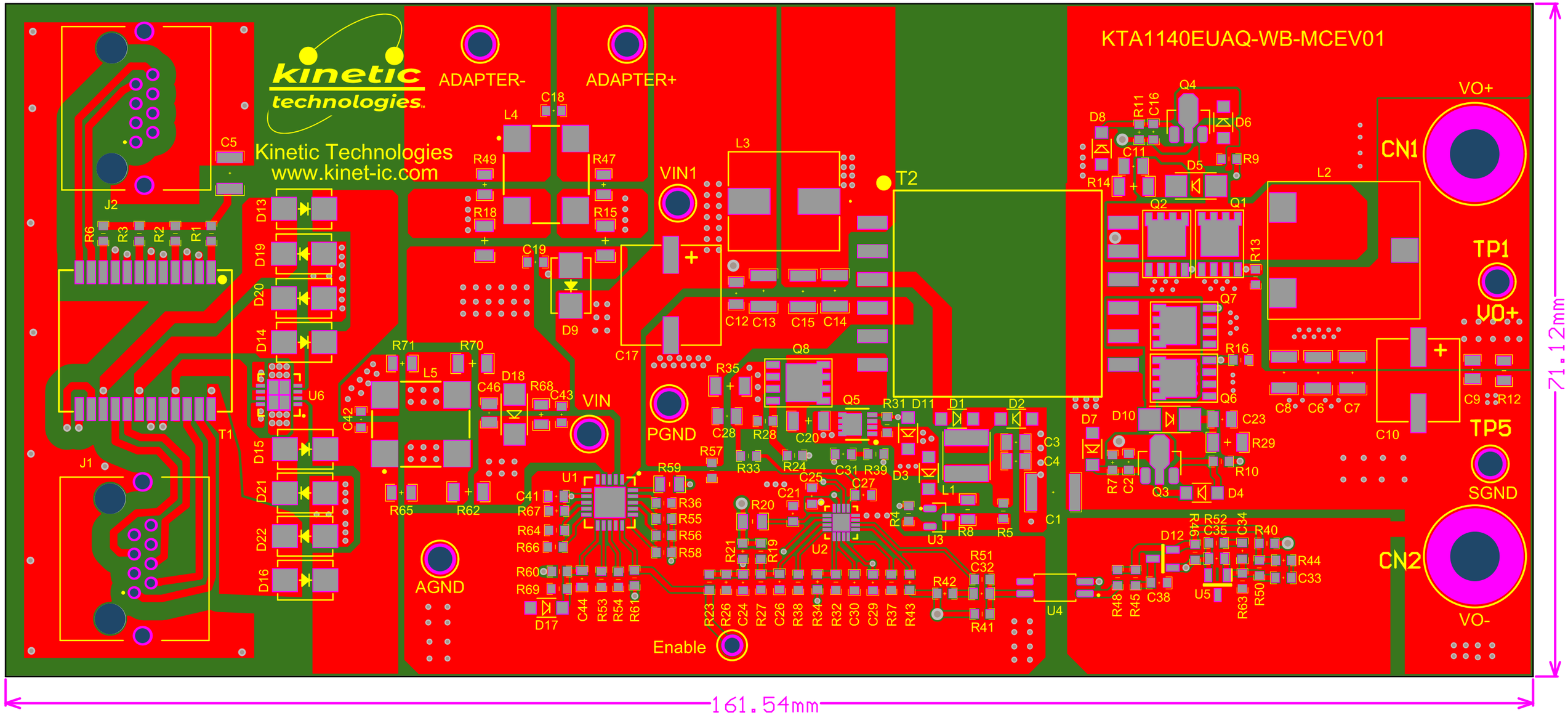
KTA1140EUAQ-WB-MCEV01
kinetic technologies
Kinetic Technologies
www.kinet-ic.com
ADAPTER-
ADAPTER+
VIN1
VIN
PGND
AGND
Enable
T2
VO+
CN1
TP1
VO+
TP5
SGND
CN2
VO-
71.12mm
161.54mm

SCH-0033-01

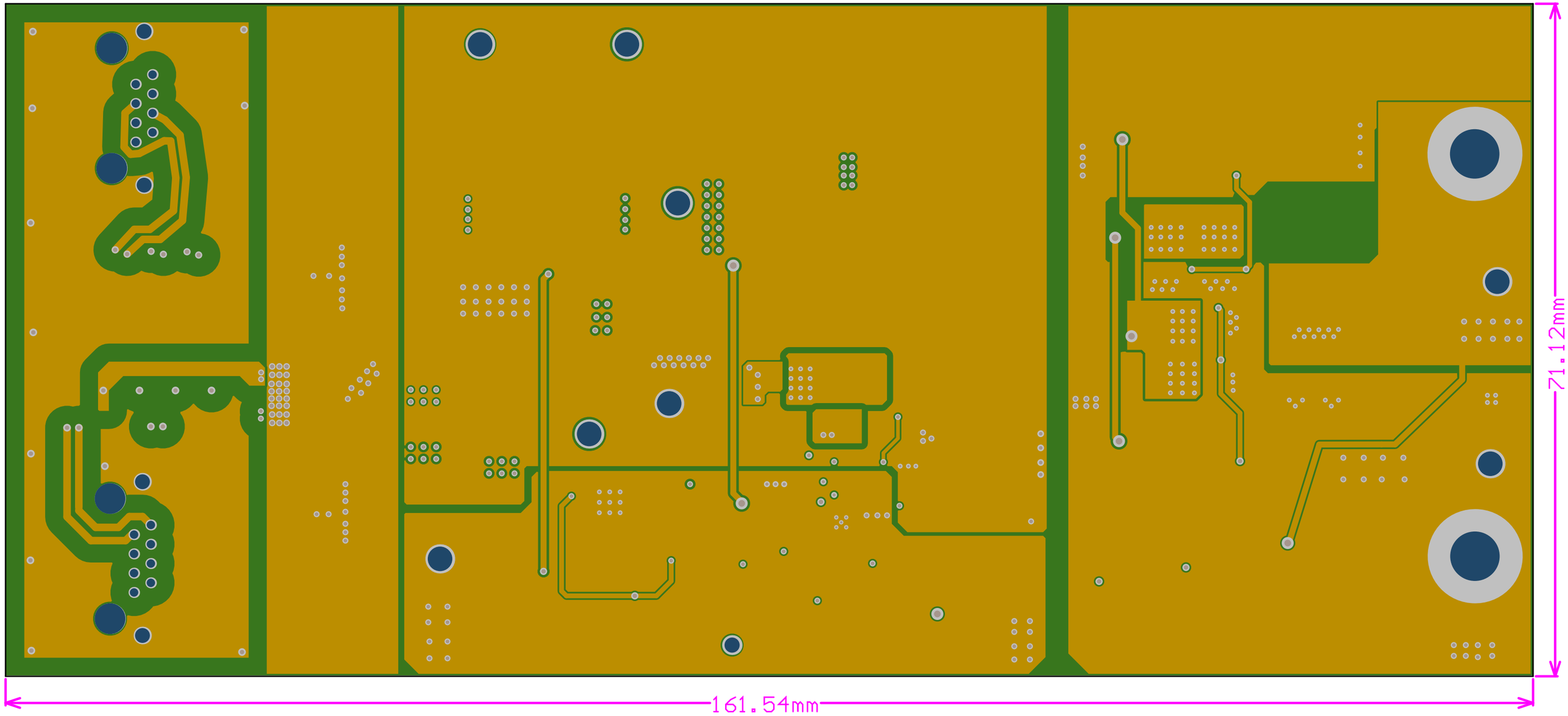

SCH-0033-01

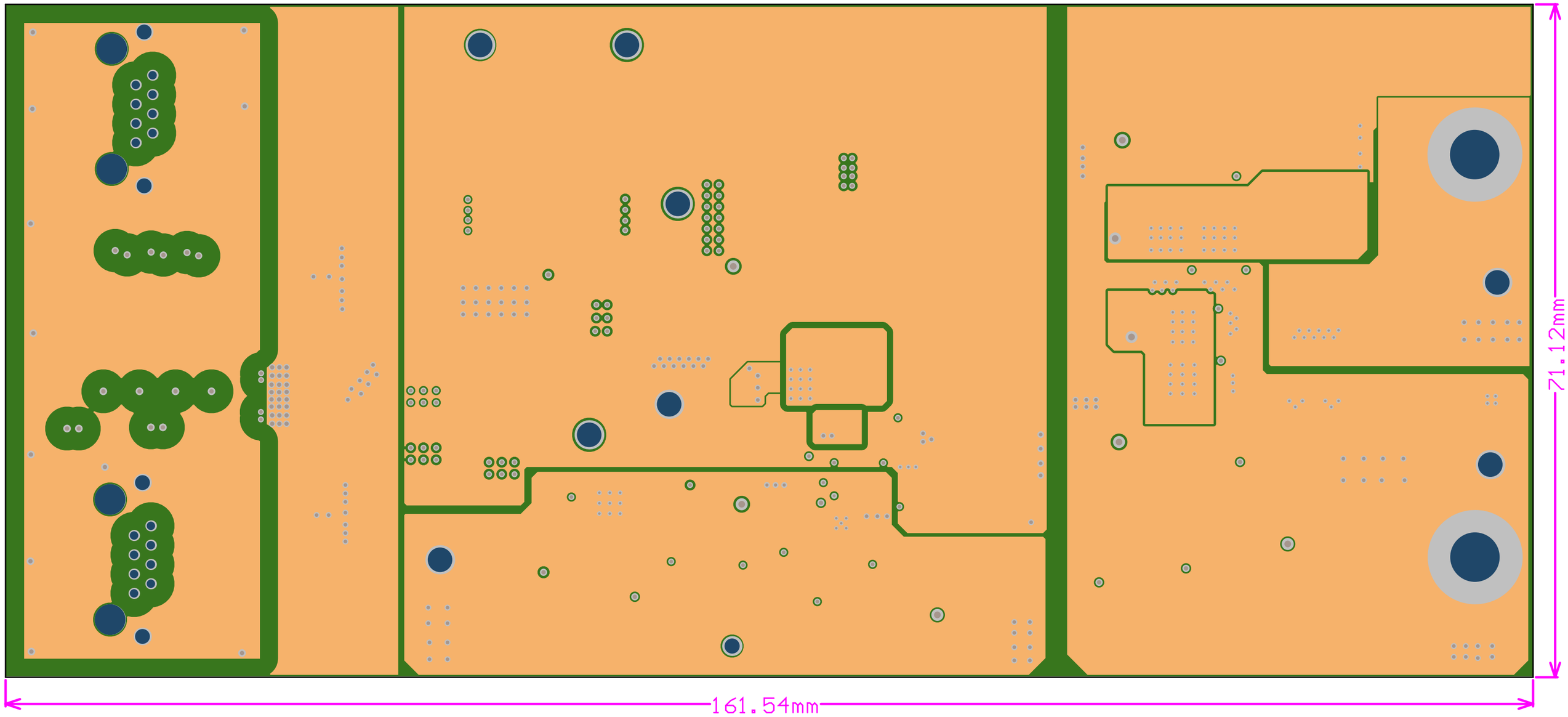

SCH-0033-01

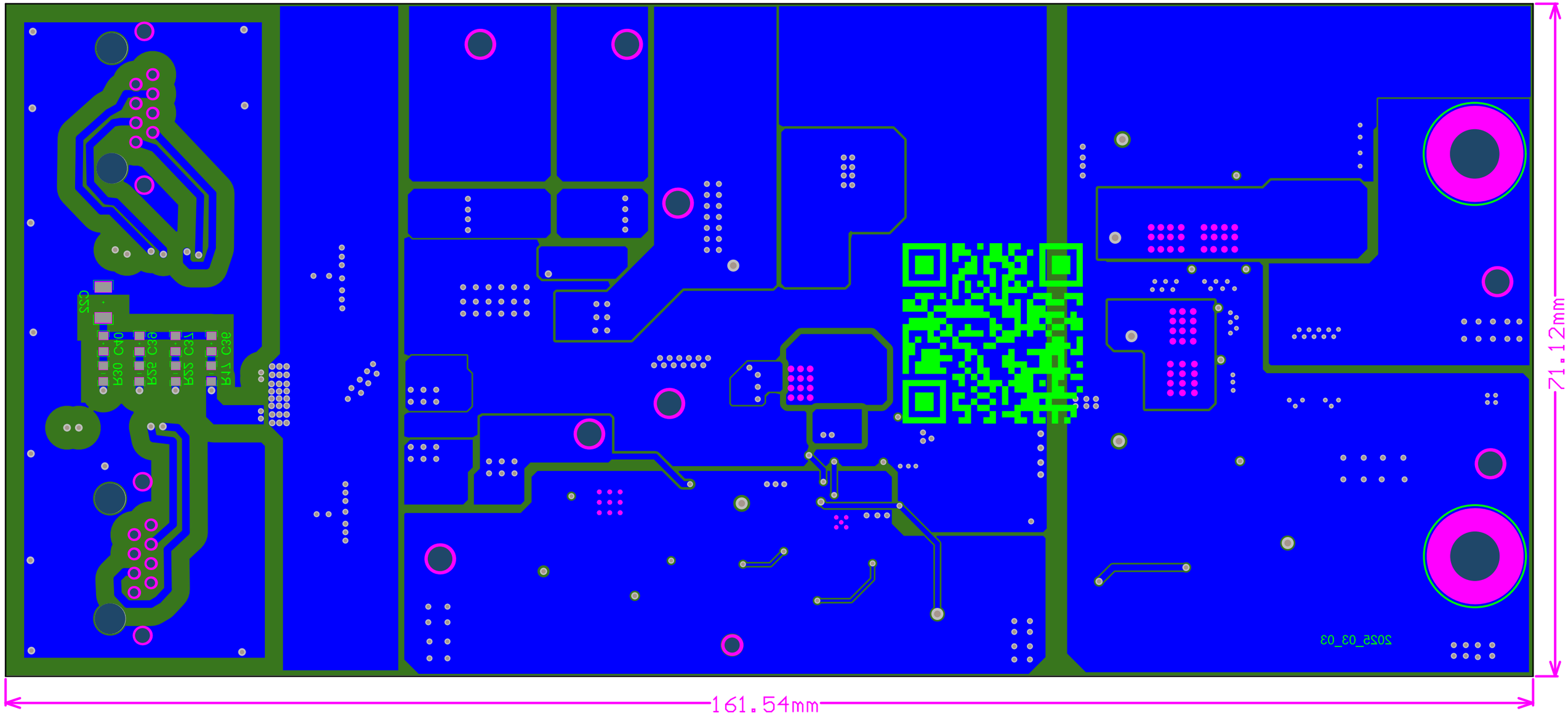

SCH-0033-01